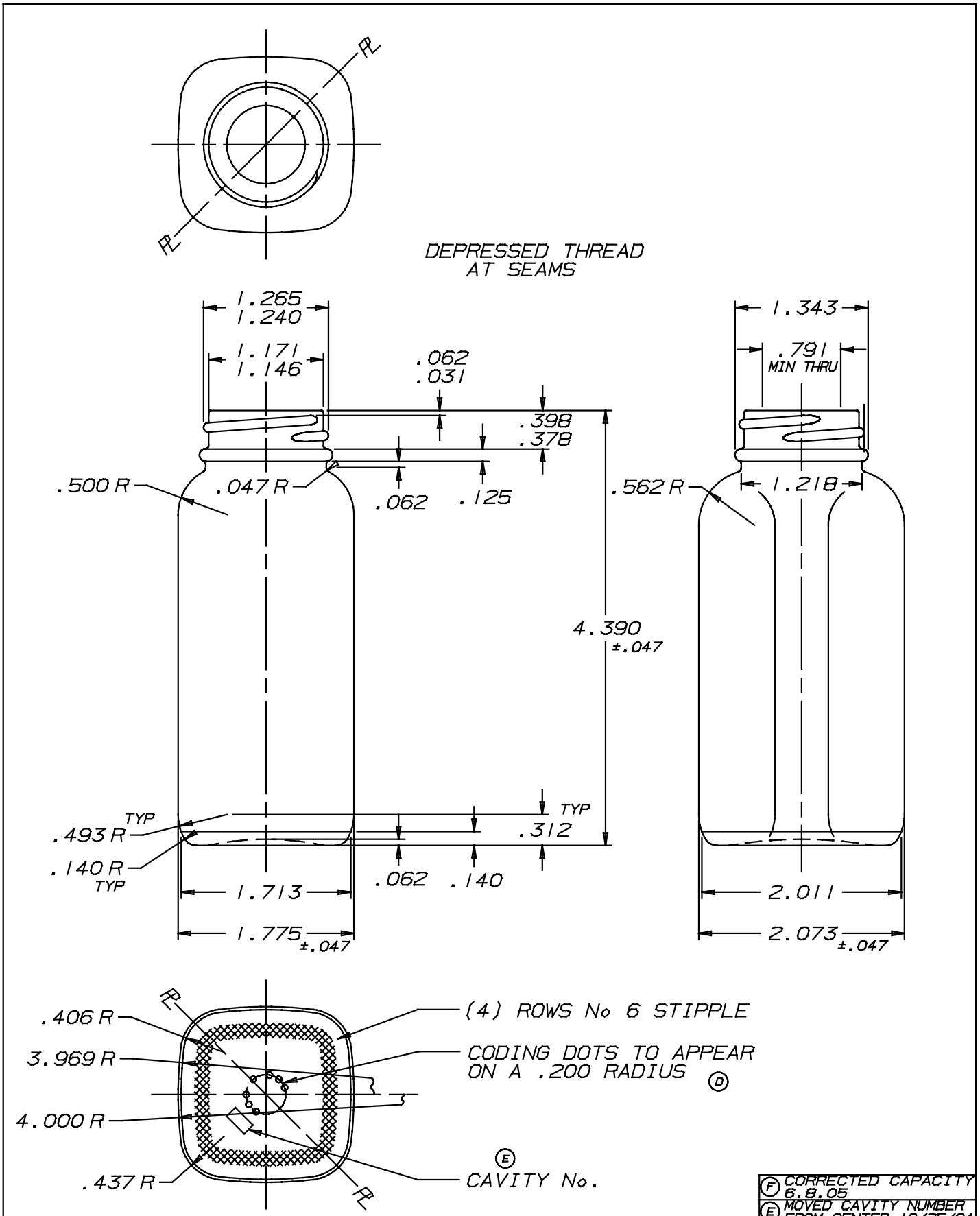

A020517B

CUSTOMER	MOLD REGISTER NO. S-3500R	DATE DRAWN 7-14-97	C REMOVE TRADEMARK FROM BOTTOM 7-22-97
TITLE FRENCH SQUARE	SCALE FULL UNLESS OTHERWISE SPECIFIED	DRAWN BY T U	REDRAWN
PRACTICAL FILL 4 oz	APPROX. WGT. 4.500oz	CHECKED BY	REVISIONS
CAPACITY 128.0cc ± 2.5cc OF F	KIMBLE GLASS MILLVILLE, N.J.	DRAWING NO: DE-31102F	
FINISH GPI 400-33MM-405			

127.6 GRAMS, FLINT / AMBER

F CORRECTED CAPACITY 6.8.05
E MOVED CAVITY NUMBER FROM CENTER 10/25/04
D BOTTOM LETTERING 1/27/98